TD250V

TAYLOR POWER SYSTEMS®

EPA Certified / Stationary Emergency

OUTPUT POWER OPTIONS					STANDBY RATING		sKVA
Make	Voltage	Alternator	Phase	Hertz	kW/kVA	Amps	30% Voltage Dip
Stamford	600	S4L1S-D4-17	3	60	250/313	301	850
	277/480	S4L1D-D41-311	3	60	250/313	376	980
	120/208	S4L1D-D41-311	3	60	250/313	868	735
	120/240	S4L1D-D41-311	3	60	250/313	753	735
Marathon	600	432PSL6246	3	60	250/313	301	930
	277/480	432CSL6210	3	60	250/313	376	930
	120/208	432CSL6210	3	60	250/313	868	699
	120/240	432CSL6210	3	60	250/313	753	699
	120/240	432CSL6210	1	60	201/201	838	268
Marathon	277/480	433CSL6216	3	60	250/313	376	1424
	120/208	433CSL6216	3	60	250/313	868	1069
	120/240	433CSL6216	3	60	250/313	753	1069
	120/240	433CSL6216	1	60	230/230	958	450

947 Industrial Park Drive • Clinton, MS 39056 • Phone (601) 932-5674 • Fax (601) 922-0800 • www.taylorpower.com

Engine Data

Manufacturer	Volvo
Model	TAD852GE
Aspiration	Turbocharged
EPA Tier	3
Charge Air Cooling System	Air-to-Air
Arrangement	Vertical Inline, 4-Cycle
Firing Order	1-4-2-6-3-5
Displacement: L (in.³)	7.70 (469.9)
Bore: mm (in.)	110.00 (4.33)
Stroke: mm (in.)	135.00 (5.31)
Compression Ratio	17.5:1
Net Horsepower	370
Rated RPM	1800
Governor	Isochronous

Engine Liquid Capacity

Oil System: qt. (L)	28.4 (27.0)
Cooling Capacity: gal (L)	10.83 (41.00)

Engine Electrical

Electric Volts: DC	24
Cold Cranking Amps	1100
Battery(s) Required	2

Fuel System

Fuel Injection Type	Electronic
Fuel Pump Rate: gal/hr (L/hr)	35.4 (134.0)
Max Return Restriction: psi (kPa)	2.2 (15.0)
Max Inlet Temperature: °F (°C)	176 (80)
Recommended Fuel	Low Sulfur Diesel

Air Requirements

Air Filter(s) Type	Dry
Combustion Air Flow: CFM (m³/min)	848.0 (24.0)
Maximum Air Intake Restriction Clean: in. H_2O (kPa)	0.7 (5.0)
Radiator Air Flow: CFM (m³/min)	15,679.71 (443.99)

Exhaust System

Gas Temperature: °F (°C)	847 (453)
Gas Flow: CFM (m³/min)	1993.0 (56.4)
Max Back Pressure: in. H_2O (kPa)	40.15 (10.00)

Sound Level

Open Unit Without Exhaust: dBA 3.2 ft (1M)	103.2

Filters and Quantity

Air Cleaner Quantity	1
Oil Filter(s) Quantity	1
Fuel Filter(s) Quantity	2

Fuel Consumption

At 100% of Power Rating: gal/hr (L/hr)	16.55 (62.65)
At 75% of Power Rating: gal/hr (L/hr)	13.00 (49.19)
At 50% of Power Rating: gal/hr (L/hr)	9.13 (34.56)
At 25% of Power Rating: gal/hr (L/hr)	4.76 (18.02)

Cooling System

Rejection to Charge Cooler: kW (BTUM)	90.0 (5118.0)
Rejection to Coolant: kW (BTUM)	115.0 (6540.0)
Rejection to Ambient: kW (BTUM)	9.0 (512.0)
Coolant Flow: gal/min (L/min)	19.34 (73.20)

GENERAL GUIDELINES FOR DERATION: Altitude: Derate 0.5% per 100m (328 ft.) Elevation above 1000m (3279 ft.) Temperature: Derate 1.0% per 10°C (18°F) temperature above 25°C (77°F)

RATINGS: All three-phase units are rated at 0.8 power factor. All single-phase units are rated at 1.0 power factor.

125° RATINGS: 125° apply to installations served by a reliable utility source. The standby rating is applicable to varying loads for the duration of a power outage. There is no overload capability for this rating. Ratings are in accordance with ISO-3046/1, BS 5514, AS 2789, and DIN 6271.For limited running time and base load ratings consult the factory. The generator set manufacturer reserves the right to change the design or specifications without notice and without any obligation or liability whatsoever.

alternator and controller data

Alternator Data

Manufacturer	Stamford	
Type	PMG	
Insulation Class	NEMA H	
Temperature Rise	125°C Standby	
Hertz	60	
RPM	1800	
Amortisseur Windings	Full	
CFM Cooling Required	2100	
Voltage Regulator	MX341	MX321
Sensing	Single Phase	Three Phase
Voltage Regulation	1.0%	0.50%

Features

- BS EN 60034, BS5000, VDE 0530, NEMA MG1-32, IEC34, CSA C22.2-100, and AS1359 complaint
- IP23 enclosure
- Dynamically balanced to exceed BS6861:Part 1 Grade 2.5 vibration standard
- Quality assurance to BS EN ISO 9001
- Self-ventilated and Drip proof construction
- Two-thirds pitch stator and skewed rotor
- Heavy duty bearings
- Fully guarded
- Overexcitation protection
- Under frequency protection
- Analog input
- Overvoltage protection
- Paralleling compatible

Alternator Data

Manufacturer	Marathon	
Type	PMG	
Insulation Class	NEMA N	
Temperature Rise	125°C Standby	
Hertz	60	
RPM	1800	
Amortisseur Windings	Full	
CFM Cooling Required	1020	
Voltage Regulator	DVR2400	PM500
Sensing	Three Phase	Three Phase
Voltage Regulation	0.25%	0.25%

Features

- NEMA MG1-32, BS5000, and IEC 34-1 compliant; CE & CSA Certified and UL Listed
- Self-ventilated and drip proof construction
- Two-thirds pitch stator and skewed rotor
- Wet wound, epoxied field windings
- Designed to withstand overspeeds of up to 125%
- Hybrid analog/digital voltage regulator
- Under frequency protection
- Under frequency indication light
- Less than one cycle response time
- Over excitation protection
- Over excitation indication light
- Easy access front-panel adjustments
- Over voltage protection shutdown

Control Panels

DeepSea 7310 MKII

Simultaneous Use of RS232 & RS485
Modbus RTU Support
Fully Configurable Using USB, RS232 & RS485
IP65 Rating
6 Programmable Inputs & 8 Outputs
UL & cUL Listed and CE Certified

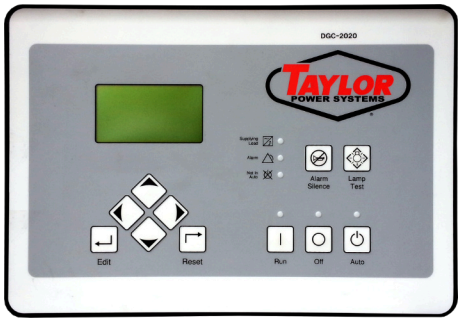

Basler DGC2020

SAE J1939 Engine ECU Communications
4 Programmable Inputs & 10 Outputs
Modbus Communications With RS485
UL Recognized, CSA & CE Certified
IP 54 Front Panel Rating
NFPA 110 Level 1 Compatible
Manual Override Keyswitch
DGC2020HD Variant Available

Taylor Analog

Automatic CANBUS Engine Control
Gauge Zeroing on Shutdown
Auto-Off-Manual Control Switch
Oil Pressure, Water Temperature, Battery Voltage and RPM Gauges
AC Voltage, Frequency, Percent of Load, and Run-Time Metering
LED Status Lights

standard features and options

Warranty

2 Year Standard
5 Year Comprehensive

Standard Features:

Heavy Duty Steel Base
Vibration Isolators
Oil Drain Valve with Extension
Coolant Drain Kit
High Ambient Unit Mounted Radiator
Battery Charger
Block Heater
Factory Powder Coating
Factory Load Test
Owner's Manual

Controller Options

DGC2020HD Controller
Fiber Optic Ethernet (DGC2020HD)
RS-232 Port & Generator Protection (DGC2020)
Flush or Surface Mount Remote Annunciator
Remote Mount Break Glass E-Stop Switch

Miscellaneous Options:

Generator Strip Heater
Spring Isolators
Line Circuit Breaker
Pad Type Battery Heater
Battery Heater Blanket
Oil Pan Heater

Open Unit

Options:
- Radiator Duct Flange
- Flex Exhaust
- Critical Silencer
- Sub-Base Fuel Tank

Overall Size: 120"L x 57"W x 74"H
Approximate Weight: 5,500 lbs.

Note: Dimensions and weights reflect standard open unit with no options and are subject to change.

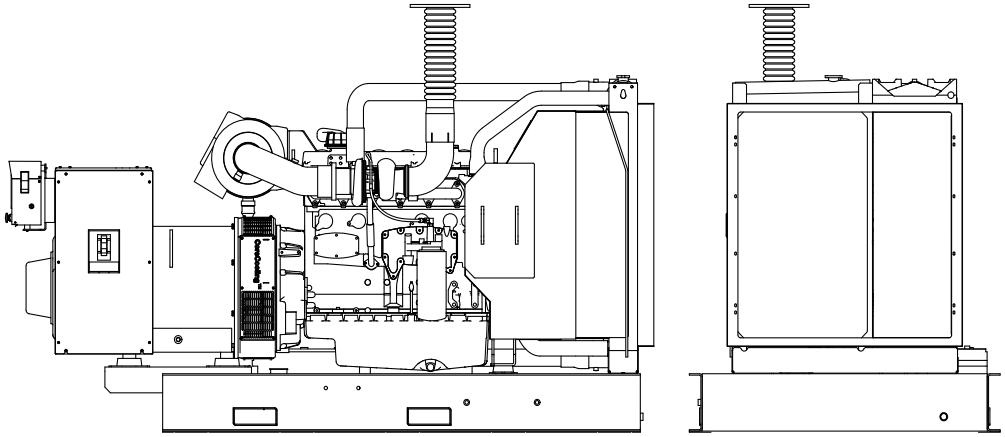

Standard Enclosed Unit

Options:
- Sound Attenuated Enclosure
- Load Center, Lights & GFI Receptacle
- Sub-Base Fuel Tank

Overall Size: 162"L x 66"W x 81"H
Approximate Weight: 7,750 lbs.

Note: Dimensions and weights reflect standard enclosed unit with no options and are subject to change.

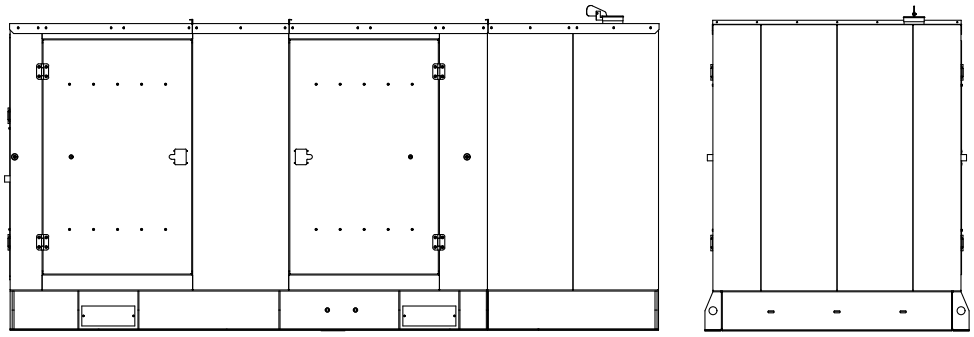

Note: The above drawings are provided for reference only and should not be used for planning installation. Contact your local distributor for more information.